CIRCULATORS FOR HEATING AND AIR CONDITIONING SYSTEMS

VB

VD

VA

CE

GENERAL DATA

Applications

Pump for hot water circulation in domestic central heating and air conditioning systems of the closed circuit pressurized type or open circuit type.

Construction features

Enbloc body composed of hydraulic section in cast iron and wet rotor motor. Motor casing in die cast aluminium. Impeller in technopolymer. Motor shaft in hardened stainless steel held in graphite bearings lubricated by the pumping medium.
Rotor protective jacket, stator jacket, and closing flange in stainless steel.
Ceramic thrust ring, ethylene-propylene seal rings and brass air breather plug. The two-pole asynchronous wet-rotor motor is resistance protected and does not require any form of overload protection.
Three-speed operation.
Protection rating: IP 44
Insulation class: F
Cable gland: PG 11
Installation: with horizontal motor shaft.
Standard voltage input: single-phase 230 V / 50 Hz
Special versions on request - alternative voltages and/or frequencies

– Designation index: (example) VA 55 / 180 X

VA = circulator with threaded ports
VB = circulator with DN 25 oval flanges
VD = twin circulator

maximum head (dm)

centre distance (mm)

standard (no ref.)	=	1” 1/2 threaded ports
1/2”	=	1” threaded ports
X	=	2” threaded ports
32	=	DN32/PN6/10 flanged ports

DAB PUMPS reserves the right to make modifications without notice.

DAB PUMP PERFORMANCE

CIRCULATORS FOR HEATING AND AIR CONDITIONING SYSTEMS

TECHNICAL DATA

No.	PARTS	MATERIALS
1	PUMP BODY	CAST IRON
4	IMPELLER	TECHNOPOLYMER
7A	MOTOR SHAFT	STAINLESS STEEL
7B	ROTOR	–
8	STATOR	–
9	CAPACITOR	–
10	MOTOR CASING	DIE CAST ALUMINIUM
11	BREATHER PLUG	BRASS
100	TERMINAL BOX	–
127	SEAL RING	ETHYLENE POLYPROPYLENE
128	STATOR JACKET	STAINLESS STEEL
129	ROTOR JACKET	STAINLESS STEEL
130	CLOSING FLANGE	STAINLESS STEEL
131	THRUST RING SUPPORT	ETHYLENE PROPYLENE
132	BUSHINGS	GRAPHITE
133	THRUST RING	CERAMIC

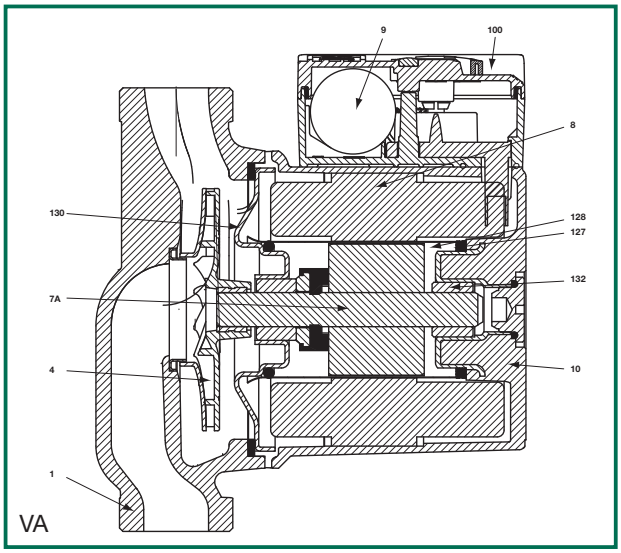

VA

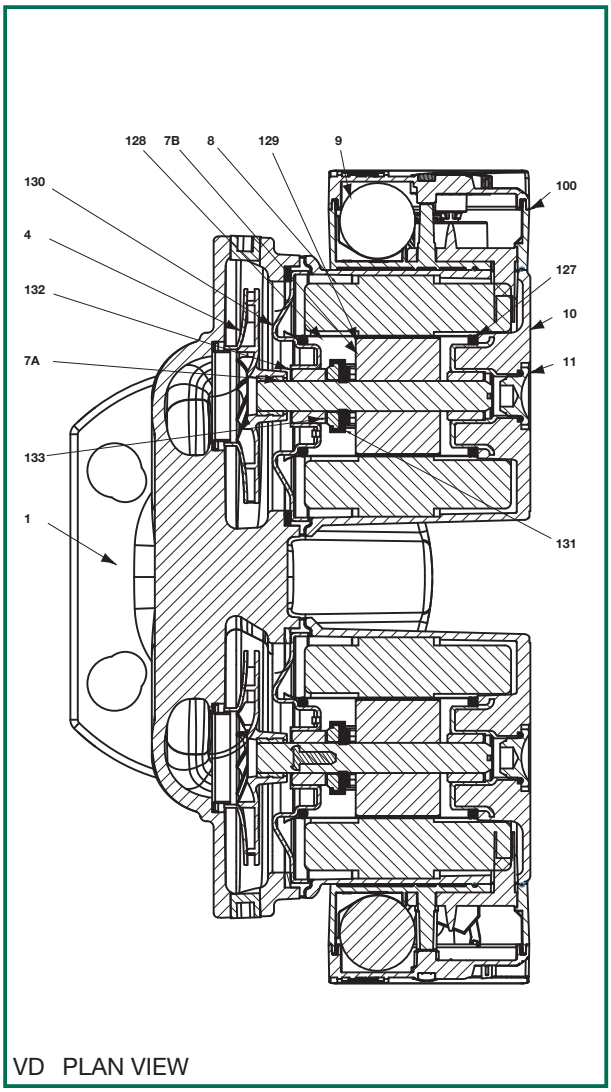

VD PLAN VIEW

Operating range:	VA - VB - VD: from 0.5 to 3.6 m^3/h with head of up to 6 m.
Liquid temperature range:	VA - VB - VD: from -10°C to +110°C
Liquid quality requirements:	clean, free of solids and mineral oils, non-viscous, chemically neutral and approximating the properties of water **(max. glycol contents 30%).**
Maximum working pressure:	VA - VB - VD 10 bar (1000 kPa)
Minimum suction pressure:	the values are given in the relative tables.
Installation:	with HORIZONTAL MOTOR SHAFT on discharge or return pipe, with suction port as close as possible to expansion vessel, above maximum boiler level and as far as possible from bends, elbows, and circuit branches to avoid water turbulence with consequent noise.
SPECIAL executions on request:	alternative voltages and/or frequencies
Optional accessories:	r3/4"F - 1"F - 1 1/4"F - 1 1/4"M unions DN20-DN25-DN32 oval counter-flanges DN32/PN6 round counter-flanges

The performance curves are based on kinematic viscosity values = 1 mm²/s and density equivalent to 1000 kg/m³. Tolerance of curves to ISO 9906.

CIRCULATORS FOR HEATING AND AIR CONDITIONING SYSTEMS

Liquid temperature range: from -10°C to +110°C
Maximum working pressure: 10 bar (1000 kPa)

VA 25/130

SINGLE WITH UNIONS

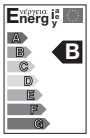

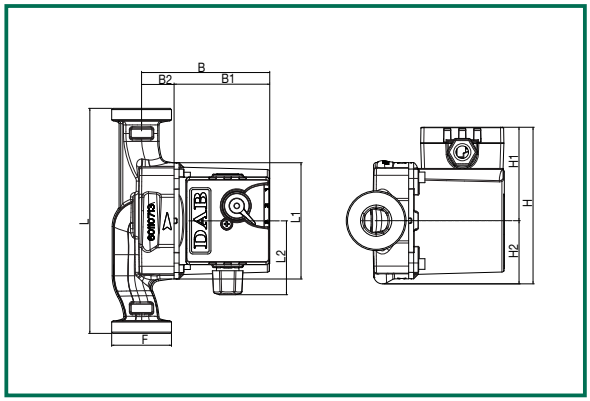

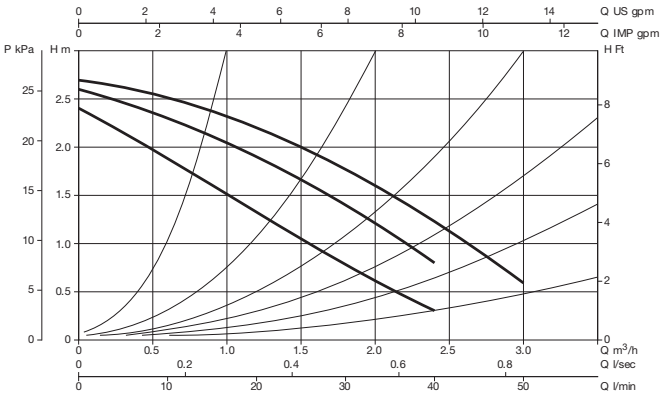

L	L1	L2	B	B1	B2	H	H1	H2	F	PACK DIMENSIONS L	B	H	VOLUME m³	WEIGHT Kg
130	93	59	102,5	76,5	26	125,5	75	50,5	48	135	135	150	0,0027	2,5

MODEL	POWER SUPPLY 50 Hz	CENTRE-DISTANCE mm	UNIONS ON REQUEST		ELECTRICAL DATA						MINIMUM SUCTION PRESSURE
			STANDARDIZED	SPECIAL	SPEED	rpm	P1 MAX W	In A	CAPACITOR µF	Vc	
VA 25/130	1x230 V ~	130	1" F	¾" F - 1 ¼" M	3 2 1	2655 2380 1680	43 38 31	0,19 0,17 0,15	1,5	450	t° +90°C m.c.a. 1,5

VA 25/180

SINGLE WITH UNIONS

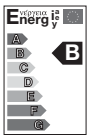

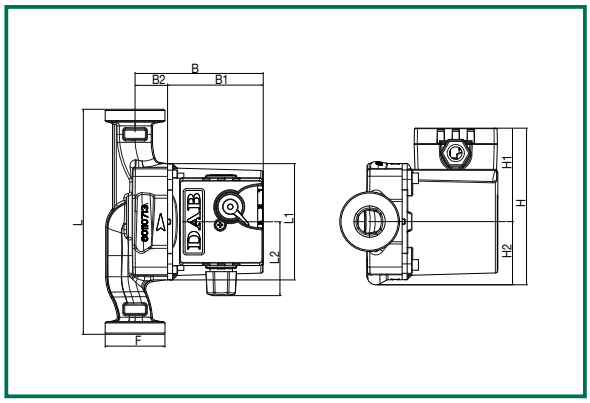

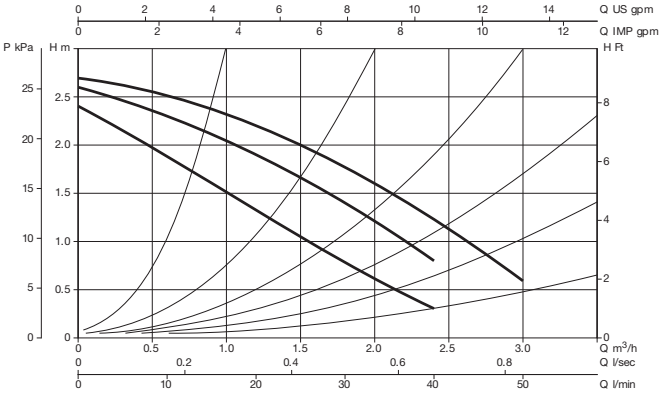

L	L1	L2	B	B1	B2	H	H1	H2	F	PACK DIMENSIONS L	B	H	VOLUME m³	WEIGHT Kg
180	93	59	102,5	76,5	26	125,5	75	50,5	48	130	190	150	0,0037	2,6

MODEL	POWER SUPPLY 50 Hz	CENTRE-DISTANCE mm	UNIONS ON REQUEST		ELECTRICAL DATA						MINIMUM SUCTION PRESSURE
			STANDARDIZED	SPECIAL	SPEED	rpm	P1 MAX W	In A	CAPACITOR µF	Vc	
VA 25/180	1x230 V ~	180	1" F	¾" F - 1 ¼" M	3 2 1	2655 2380 1680	43 38 31	0,19 0,17 0,15	1,5	450	t° +90°C m.c.a. 1,5

DAB PUMPS reserves the right to make modifications without notice.

The performance curves are based on kinematic viscosity values = 1 mm²/s and density equivalent to 1000 kg/m³. Tolerance of curves to ISO 9906.

CIRCULATORS FOR HEATING AND AIR CONDITIONING SYSTEMS

Liquid temperature range: from -10°C to +110°C
Maximum working pressure: 10 bar (1000 kPa)

VA 25/180X

SINGLE WITH UNIONS

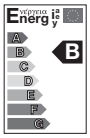

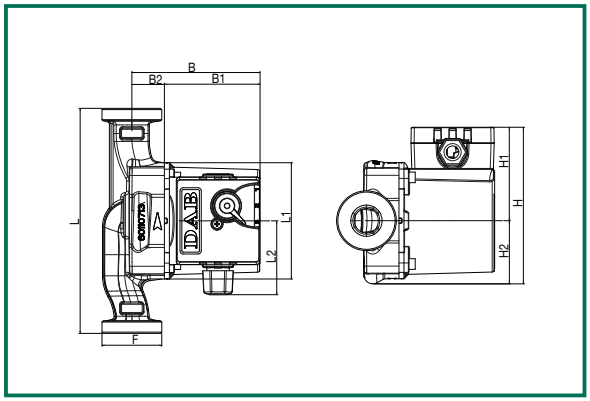

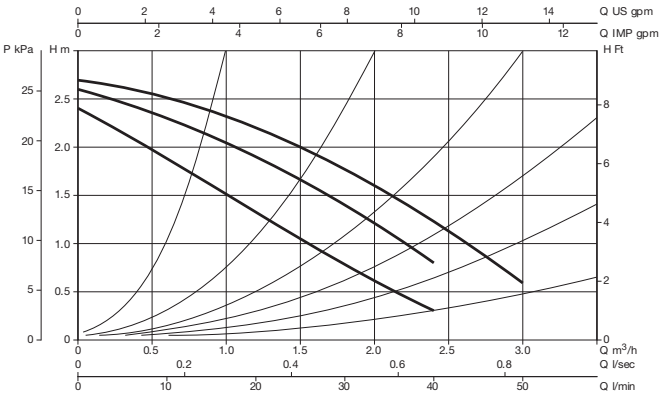

L	L1	L2	B	B1	B2	H	H1	H2	F	PACK DIMENSIONS L	B	H	VOLUME m³	WEIGHT Kg
180	93	59	102,5	76,5	26	125,5	75	50,5	48	130	190	150	0,0037	2,6

MODEL	POWER SUPPLY 50 Hz	CENTRE-DISTANCE mm	UNIONS ON REQUEST	ELECTRICAL DATA SPEED	rpm	P1 MAX W	In A	CAPACITOR µF	Vc	MINIMUM SUCTION PRESSURE
VA 25/180X	1x230 V ~	180	1" 1/4 F	3 2 1	2655 2380 1680	43 38 31	0,19 0,17 0,15	1,5	450	t° +90°C m.c.a. 1,5

VA 35/130

SINGLE WITH UNIONS

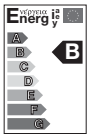

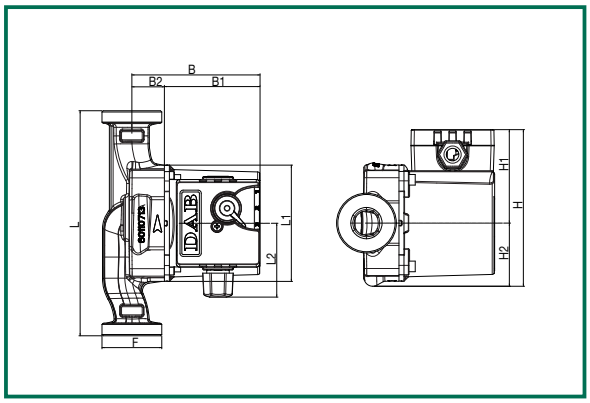

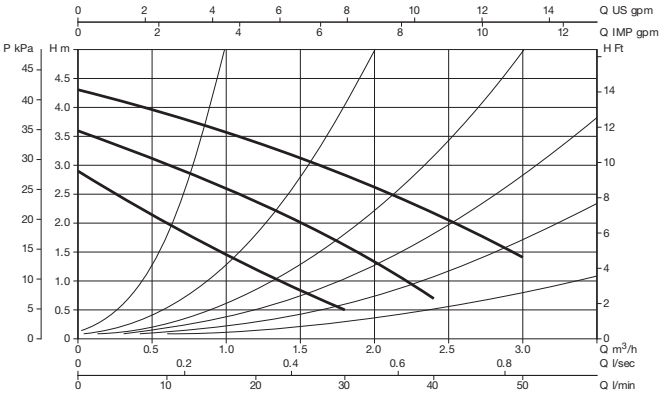

L	L1	L2	B	B1	B2	H	H1	H2	F	PACK DIMENSIONS L	B	H	VOLUME m³	WEIGHT Kg
130	93	59	102,5	76,5	26	125,5	75	50,5	48	135	135	150	0,0027	2,5

MODEL	POWER SUPPLY 50 Hz	CENTRE-DISTANCE mm	UNIONS ON REQUEST STANDARDIZED	SPECIAL	ELECTRICAL DATA SPEED	rpm	P1 MAX W	In A	CAPACITOR µF	Vc	MINIMUM SUCTION PRESSURE
VA 35/130	1x230 V ~	130	1" F	3/4" F - 1 1/4" M	3 2 1	2465 1930 1150	56 50 35	0,25 0,22 0,16	1,7	450	t° +90°C m.c.a. 1,5

The performance curves are based on kinematic viscosity values = 1 mm²/s and density equivalent to 1000 kg/m³. Tolerance of curves to ISO 9906.

CIRCULATORS FOR HEATING AND AIR CONDITIONING SYSTEMS

Liquid temperature range: from -10°C to +110°C
Maximum working pressure: 10 bar (1000 kPa)

VA 35/130 - 1/2”

SINGLE WITH UNIONS

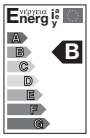

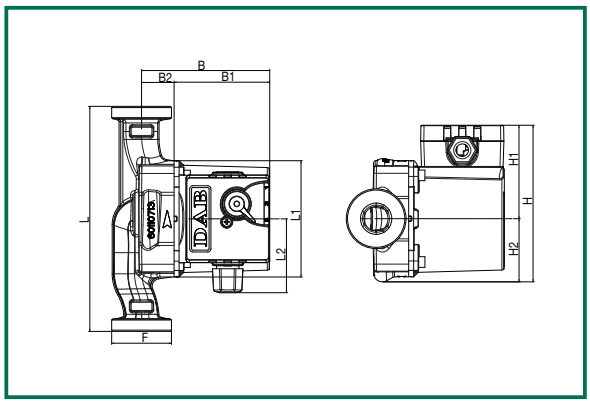

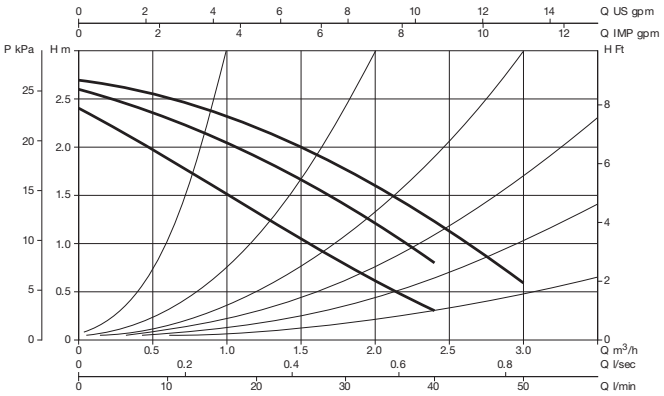

L	L1	L2	B	B1	B2	H	H1	H2	F	PACK DIMENSIONS L	B	H	VOLUME m³	WEIGHT Kg
130	93	59	102,5	76,5	26	125,5	75	50,5	48	135	135	150	0,0027	2,5

MODEL	POWER SUPPLY 50 Hz	CENTRE-DISTANCE mm	UNIONS ON REQUEST		ELECTRICAL DATA						MINIMUM SUCTION PRESSURE
			STANDARDIZED	SPECIAL	SPEED	rpm	P1 MAX W	In A	CAPACITOR µF	Vc	
VA 35/130 1/2”	1x230 V ~	130	–	–	3 2 1	2465 1930 1150	56 50 35	0,25 0,22 0,16	1,7	450	t° +90°C m.c.a. 1,5

VA 35/180

SINGLE WITH UNIONS

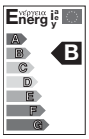

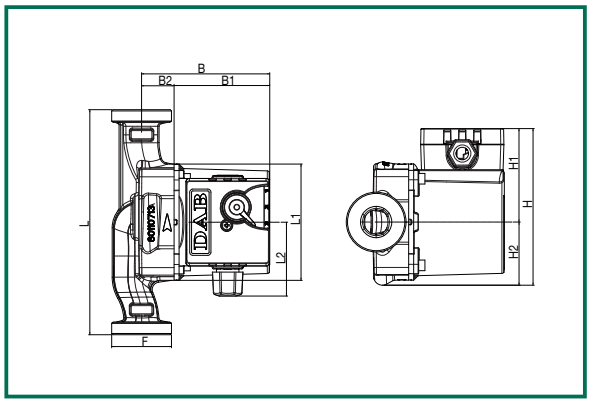

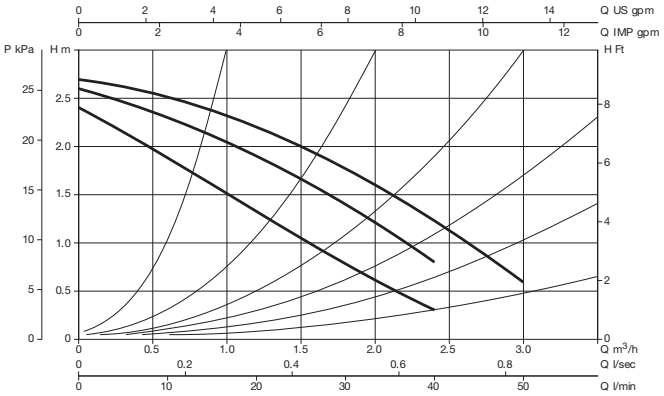

L	L1	L2	B	B1	B2	H	H1	H2	F	PACK DIMENSIONS L	B	H	VOLUME m³	WEIGHT kg
180	93	59	102,5	76,5	26	125,5	75	50,5	48	130	190	150	0,0037	2,6

MODEL	POWER SUPPLY 50 Hz	CENTRE-DISTANCE mm	UNIONS ON REQUEST		ELECTRICAL DATA						MINIMUM SUCTION PRESSURE
			STANDARDIZED	SPECIAL	SPEED	rpm	P1 MAX W	In A	CAPACITOR µF	Vc	
VA 35/180	1x230 V ~	180	1” F	3/4” F - 1 1/4” M	3 2 1	2465 1930 1150	56 50 35	0,25 0,22 0,16	1,7	450	t° +90°C m.c.a. 1,5

DAB PUMPS reserves the right to make modifications without notice.

The performance curves are based on kinematic viscosity values = 1 mm²/s and density equivalent to 1000 kg/m³. Tolerance of curves to ISO 9906.

CIRCULATORS FOR HEATING AND AIR CONDITIONING SYSTEMS

Liquid temperature range: from -10°C to +110°C
Maximum working pressure: 10 bar (1000 kPa)

VA 35/180X

SINGLE WITH UNIONS

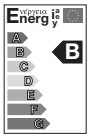

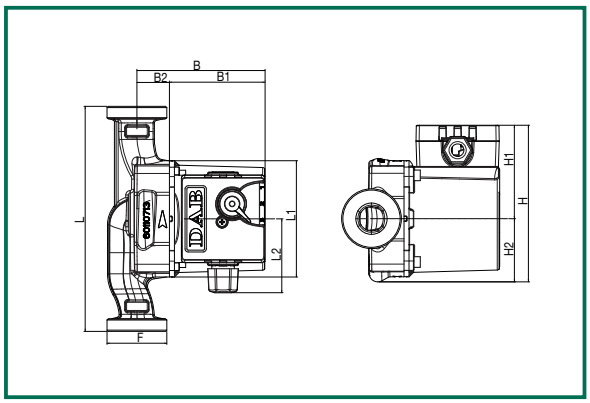

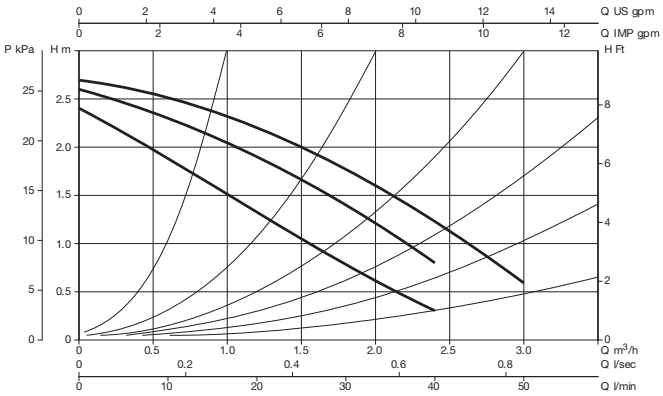

L	L1	L2	B	B1	B2	H	H1	H2	F	PACK DIMENSIONS L	B	H	VOLUME m³	WEIGHT kg
180	93	59	102,5	76,5	26	125,5	75	50,5	48	130	190	150	0,0037	2,6

MODEL	POWER SUPPLY 50 Hz	CENTRE-DISTANCE mm	UNIONS ON REQUEST	ELECTRICAL DATA SPEED	rpm	P1 MAX W	In A	CAPACITOR µF	Vc	MINIMUM SUCTION PRESSURE
VA 35/180X	1x230 V ~	180	1 ¼" F	3 2 1	2465 1930 1150	56 50 35	0,25 0,22 0,16	1,7	450	t° +90°C m.c.a. 1,5

VB 35/120

SINGLE WITH OVAL FLANGES

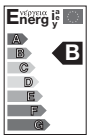

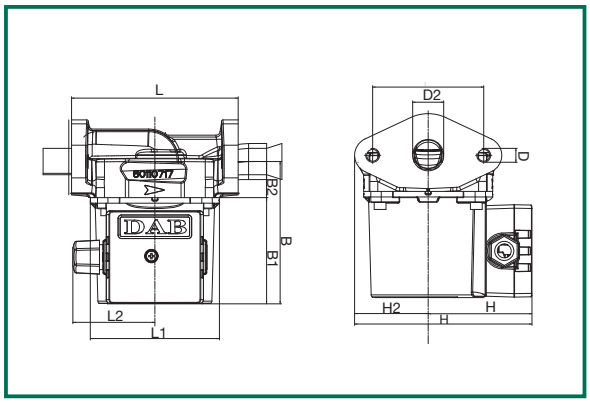

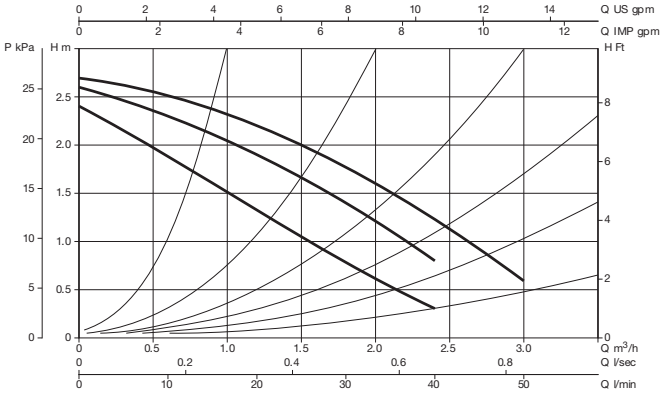

L	L1	L2	B	B1	B2	H	H1	H2	D2	D1	I	PACK DIMENSIONS L	B	H	VOLUME m³	WEIGHT Kg
120	98	60	104	78	26	124	75	49	25	M10	78	135	135	150	0,0027	2,7

MODEL	POWER SUPPLY 50 Hz	CENTRE-DISTANCE mm	UNIONS ON REQUEST STANDARDIZED	SPECIAL	ELECTRICAL DATA SPEED	rpm	P1 MAX W	In A	CAPACITOR µF	Vc	MINIMUM SUCTION PRESSURE
VB 35/120	1x230 V ~	120	DN 25	DN 20 DN 32	3 2 1	2465 1930 1150	56 50 35	0,25 0,22 0,16	1,7	450	t° +90°C m.c.a. 1,5

The performance curves are based on kinematic viscosity values = 1 mm²/s and density equivalent to 1000 kg/m³. Tolerance of curves to ISO 9906.

CIRCULATORS FOR HEATING AND AIR CONDITIONING SYSTEMS

Liquid temperature range: from -10°C to +110°C
Maximum working pressure: 10 bar (1000 kPa)

VA 55/130

SINGLE WITH UNIONS

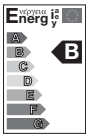

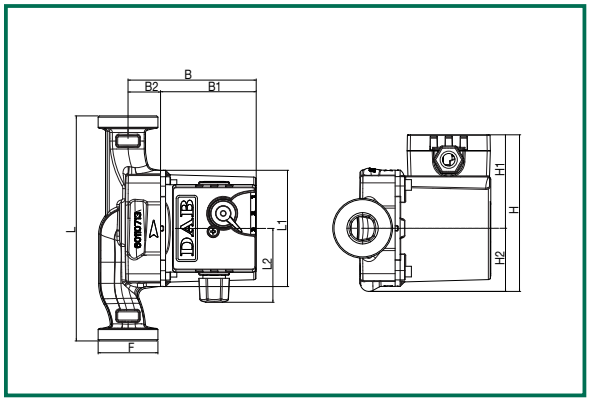

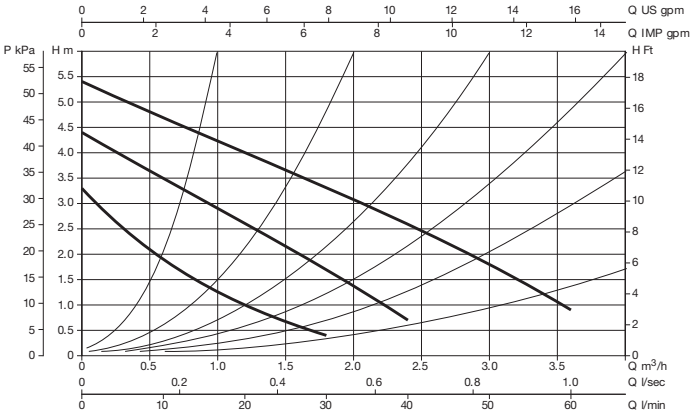

L	L1	L2	B	B1	B2	H	H1	H2	F	PACK DIMENSIONS L	PACK DIMENSIONS B	PACK DIMENSIONS H	VOLUME m³	WEIGHT kg
130	93	59	102,5	76,5	26	125,5	75	50,5	48	135	135	150	0,0027	2,5

MODEL	POWER SUPPLY 50 Hz	CENTRE-DISTANCE mm	UNIONS ON REQUEST STANDARDIZED	UNIONS ON REQUEST SPECIAL	ELECTRICAL DATA SPEED	rpm	P1 MAX W	In A	CAPACITOR µF	CAPACITOR Vc	MINIMUM SUCTION PRESSURE
VA 55/130	1x230 V ~	130	1" F	¾" F - 1 ¼" M	3 2 1	2400 1600 930	70 58 36	0,3 0,26 0,17	1,7	450	t° +90°C m.c.a. 1,5

VA 55/130 - ½"

SINGLE WITH UNIONS

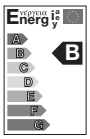

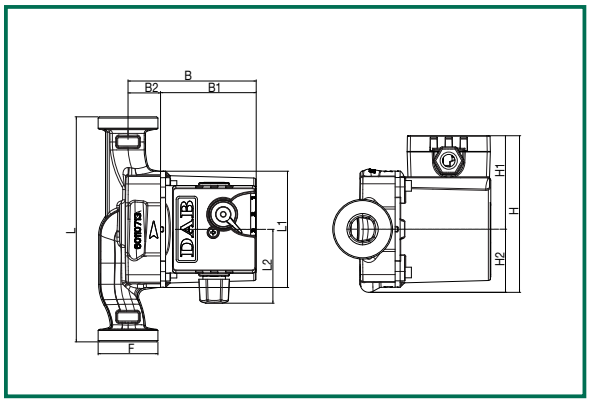

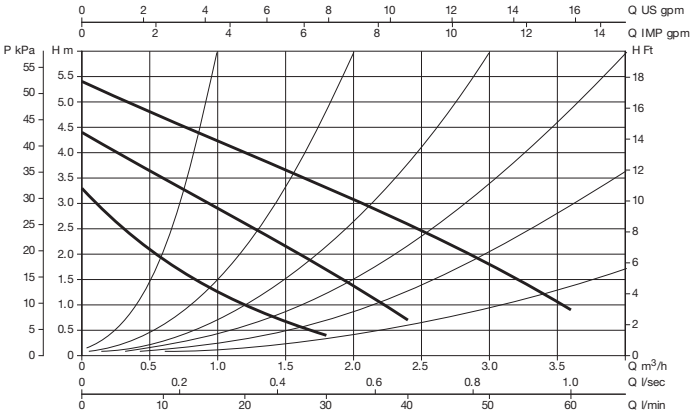

L	L1	L2	B	B1	B2	H	H1	H2	F	PACK DIMENSIONS L	PACK DIMENSIONS B	PACK DIMENSIONS H	VOLUME m³	WEIGHT kg
130	93	59	102,5	76,5	26	125,5	75	50,5	48	135	135	150	0,0027	2,5

MODEL	POWER SUPPLY 50 Hz	CENTRE-DISTANCE mm	UNIONS ON REQUEST STANDARDIZED	UNIONS ON REQUEST SPECIAL	ELECTRICAL DATA SPEED	rpm	P1 MAX W	In A	CAPACITOR µF	CAPACITOR Vc	MINIMUM SUCTION PRESSURE
VA 55/130 ½"	1x230 V ~	130	–	–	3 2 1	2400 1600 930	70 58 36	0,3 0,26 0,17	1,7	450	t° +90°C m.c.a. 1,5

DAB PUMPS reserves the right to make modifications without notice.

The performance curves are based on kinematic viscosity values = 1 mm²/s and density equivalent to 1000 kg/m³. Tolerance of curves to ISO 9906.

CIRCULATORS FOR HEATING AND AIR CONDITIONING SYSTEMS

Liquid temperature range: from -10°C to +110°C
Maximum working pressure: 10 bar (1000 kPa)

VA 55/180

SINGLE WITH UNIONS

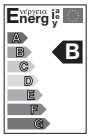

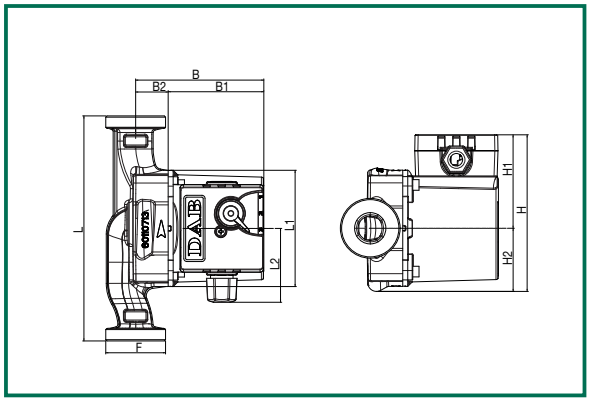

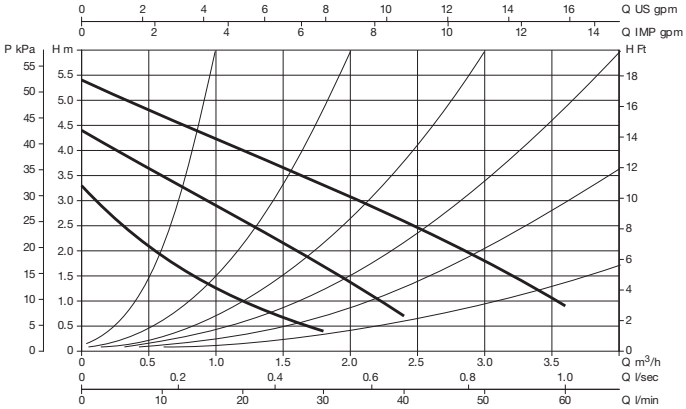

L	L1	L2	B	B1	B2	H	H1	H2	F	PACK DIMENSIONS L	PACK DIMENSIONS B	PACK DIMENSIONS H	VOLUME m³	WEIGHT kg
180	93	59	102,5	76,5	26	125,5	75	50,5	48	130	190	150	0,0037	2,6

MODEL	POWER SUPPLY 50 Hz	CENTRE-DISTANCE mm	UNIONS ON REQUEST STANDARDIZED	UNIONS ON REQUEST SPECIAL	ELECTRICAL DATA SPEED	rpm	P1 MAX W	In A	CAPACITOR µF	CAPACITOR Vc	MINIMUM SUCTION PRESSURE
VA 55/180	1x230 V ~	180	1" F	¾" F - 1 ¼" M	3 2 1	2400 1600 930	70 58 36	0,3 0,26 0,17	1,7	450	t° +90°C m.c.a. 1,5

VA 55/180X

SINGLE WITH UNIONS

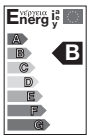

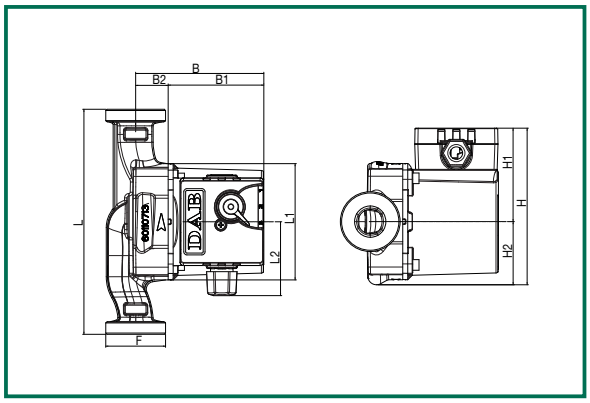

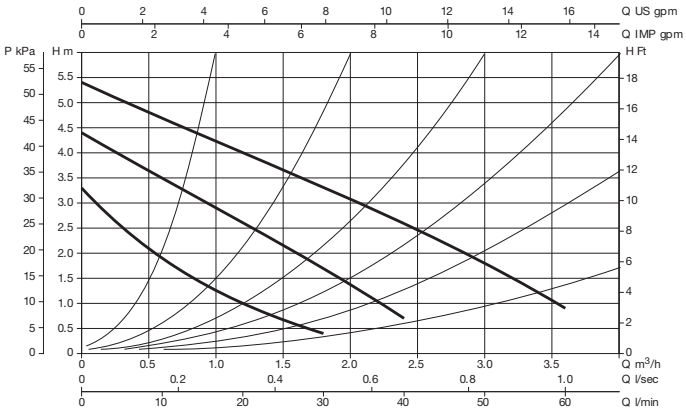

L	L1	L2	B	B1	B2	H	H1	H2	F	PACK DIMENSIONS L	PACK DIMENSIONS B	PACK DIMENSIONS H	VOLUME m³	WEIGHT kg
180	93	59	102,5	76,5	26	125,5	75	50,5	48	130	190	150	0,0037	2,6

MODEL	POWER SUPPLY 50 Hz	CENTRE-DISTANCE mm	UNIONS ON REQUEST	ELECTRICAL DATA SPEED	rpm	P1 MAX W	In A	CAPACITOR µF	CAPACITOR Vc	MINIMUM SUCTION PRESSURE
VA 55/180X	1x230 V ~	180	1¼"F	3 2 1	2400 1600 930	70 58 36	0,3 0,26 0,17	1,7	450	t° +90°C m.c.a. 1,5

The performance curves are based on kinematic viscosity values = 1 mm²/s and density equivalent to 1000 kg/m³. Tolerance of curves to ISO 9906.

CIRCULATORS FOR HEATING AND AIR CONDITIONING SYSTEMS

Liquid temperature range: from -10°C to +110°C
Maximum working pressure: 10 bar (1000 kPa)

VB 55/120

SINGLE WITH OVAL FLANGES

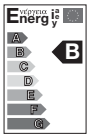

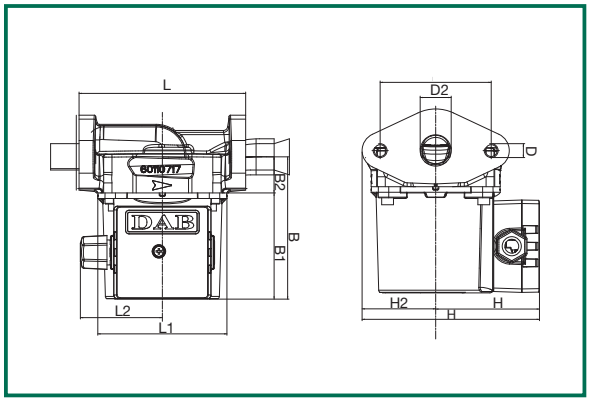

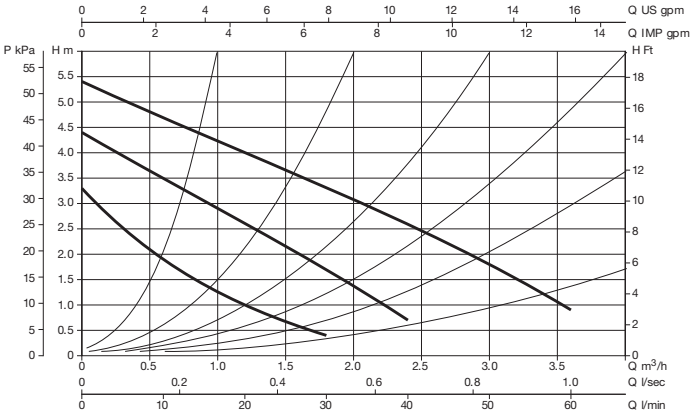

L	L1	L2	B	B1	B2	H	H1	H2	D2	D1	I	PACK DIMENSIONS L	B	H	VOLUME m³	WEIGHT Kg
120	98	60	104	78	26	124	75	49	25	M10	80	135	135	150	0,0027	2,7

MODEL	POWER SUPPLY 50 Hz	CENTRE-DISTANCE mm	UNIONS ON REQUEST		ELECTRICAL DATA						MINIMUM SUCTION PRESSURE
			STANDARDIZED	SPECIAL	SPEED	rpm	P1 MAX W	In A	CAPACITOR µF	Vc	
VB 55/120	1x230 V ~	120	DN 25	DN 20 DN 32	3 2 1	2400 1600 930	70 58 36	0,3 0,26 0,17	1,7	450	t° +90°C m.c.a. 1,5

VD 55/220.32

TWIN FLANGED

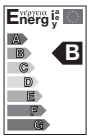

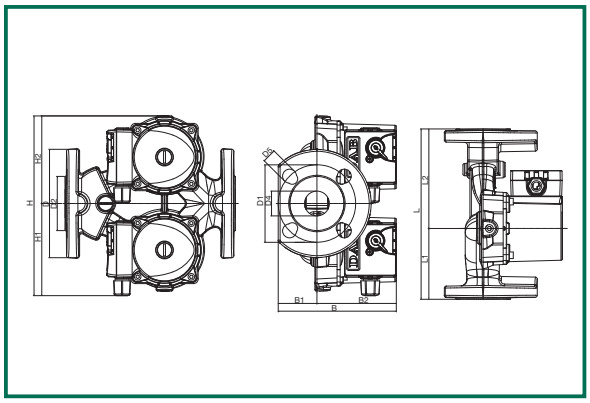

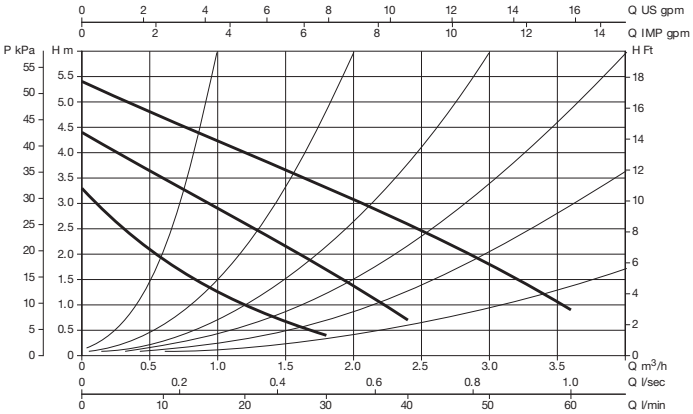

L	L1	L2	B	B1	B2	D	D1 PN6	D1 PN10	D2	D4	D5 PN6	D5 PN10	H	H1	H2	PACK DIMENSIONS B	L	H	VOLUME m³	WEIGHT Kg
220	91,5	128,5	150	50	100	140	90	100	70	32	14	18	230	115	115	160	253	238	0,0096	8,2

MODEL	POWER SUPPLY 50 Hz	CENTRE-DISTANCE mm	UNIONS ON REQUEST	ELECTRICAL DATA*						MINIMUM SUCTION PRESSURE
				SPEED	rpm	P1 MAX W	In A	CAPACITOR µF	Vc	
VD 55/220.32	1x230 V ~	220	DN 32 / PN 6 / PN 10	3 2 1	2400 1600 930	70 58 36	0,3 0,26 0,17	1,7	450	t° +90°C m.c.a. 1,5

*Electrical and hydraulic data refer to operation of just one motor.

The performance curves are based on kinematic viscosity values = 1 mm²/s and density equivalent to 1000 kg/m³. Tolerance of curves to ISO 9906.

CIRCULATORS FOR HEATING AND AIR CONDITIONING SYSTEMS

Liquid temperature range: from -10°C to +110°C
Maximum working pressure: 10 bar (1000 kPa)

VA 65/130

SINGLE WITH UNIONS

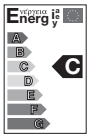

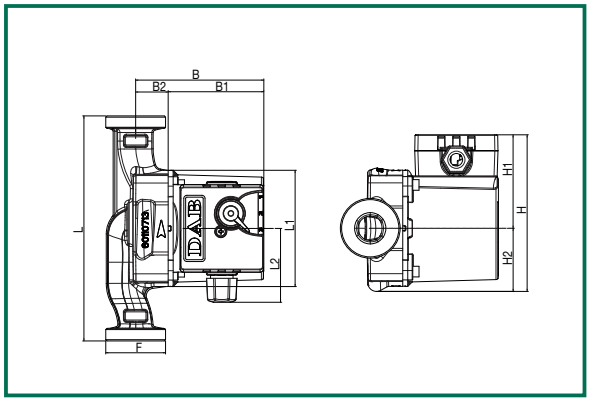

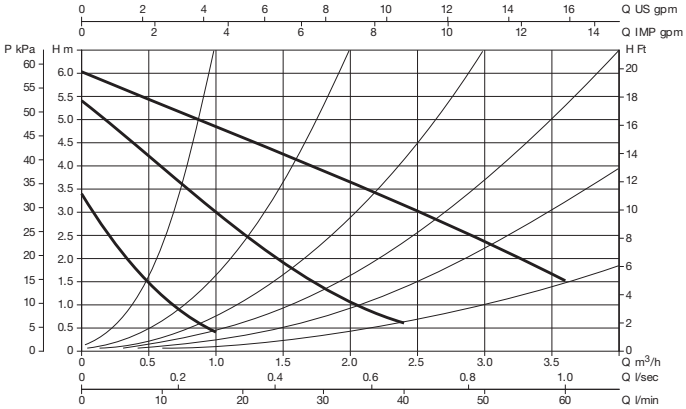

L	L1	L2	B	B1	B2	H	H1	H2	F	PACK DIMENSIONS L	PACK DIMENSIONS B	PACK DIMENSIONS H	VOLUME m³	WEIGHT kg
130	93	59	102,5	76,5	26	125,5	75	50,5	48	135	135	150	0,0027	2,5

MODEL	POWER SUPPLY 50 Hz	CENTRE-DISTANCE mm	UNIONS ON REQUEST STANDARDIZED	UNIONS ON REQUEST SPECIAL	ELECTRICAL DATA SPEED	rpm	P1 MAX W	In A	CAPACITOR µF	CAPACITOR Vc	MINIMUM SUCTION PRESSURE
VA 65/130	1x230 V ~	130	1" F	¾" F - 1 ¼" M	3 2 1	2310 1532 880	78 59 37	0,34 0,26 0,17	2	450	t° +90°C m.c.a. 2,5

VA 65/130 ½"

SINGLE WITH UNIONS

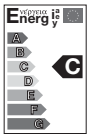

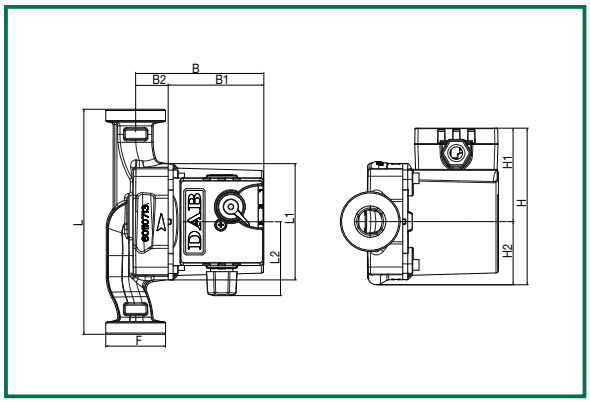

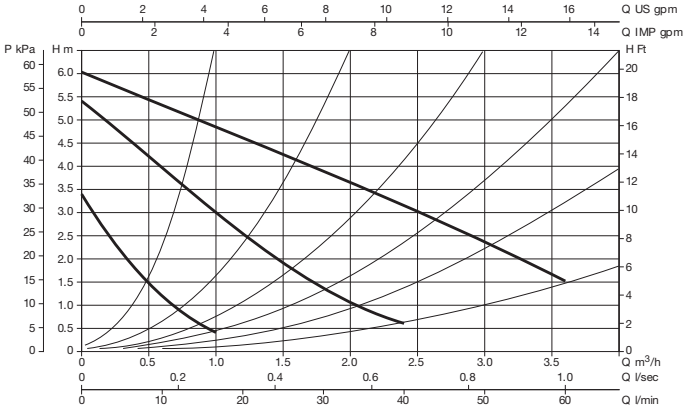

L	L1	L2	B	B1	B2	H	H1	H2	F	PACK DIMENSIONS L	PACK DIMENSIONS B	PACK DIMENSIONS H	VOLUME m³	WEIGHT kg
130	93	59	102,5	76,5	26	125,5	75	50,5	48	135	135	150	0,0027	2,5

MODEL	POWER SUPPLY 50 Hz	CENTRE-DISTANCE mm	UNIONS ON REQUEST STANDARDIZED	UNIONS ON REQUEST SPECIAL	ELECTRICAL DATA SPEED	rpm	P1 MAX W	In A	CAPACITOR µF	CAPACITOR Vc	MINIMUM SUCTION PRESSURE
VA 65/130 ½"	1x230 V ~	130	–	–	3 2 1	2310 1532 880	78 59 37	0,34 0,26 0,17	2	450	t° +90°C m.c.a. 2,5

The performance curves are based on kinematic viscosity values = 1 mm²/s and density equivalent to 1000 kg/m³. Tolerance of curves to ISO 9906.

CIRCULATORS FOR HEATING AND AIR CONDITIONING SYSTEMS

Liquid temperature range: from -10°C to +110°C
Maximum working pressure: 10 bar (1000 kPa)

VA 65/180

SINGLE WITH UNIONS

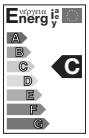

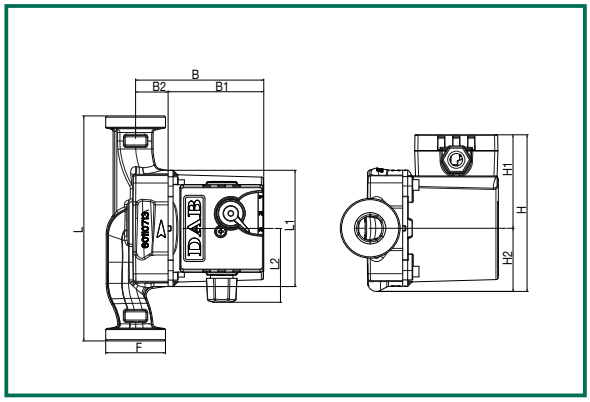

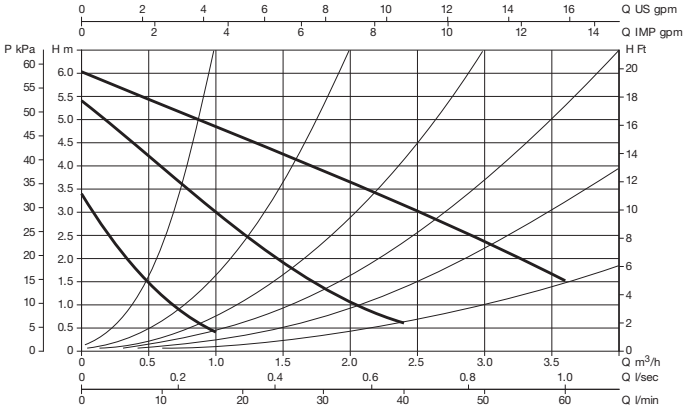

L	L1	L2	B	B1	B2	H	H1	H2	F	PACK DIMENSIONS L	PACK DIMENSIONS B	PACK DIMENSIONS H	VOLUME m³	WEIGHT kg
180	93	59	102,5	76,5	26	125,5	75	50,5	48	130	190	150	0,0037	2,6

MODEL	POWER SUPPLY 50 Hz	CENTRE-DISTANCE mm	UNIONS ON REQUEST STANDARDIZED	UNIONS ON REQUEST SPECIAL	ELECTRICAL DATA SPEED	rpm	P1 MAX W	In A	CAPACITOR µF	CAPACITOR Vc	MINIMUM SUCTION PRESSURE
VA 65/180	1x230 V ~	180	1" F	¾" F - 1 ¼" M	3 2 1	2310 1532 880	78 59 37	0,34 0,26 0,17	2	450	t° +90°C m.c.a. 2,5

VA 65/180X

SINGLE WITH UNIONS

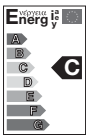

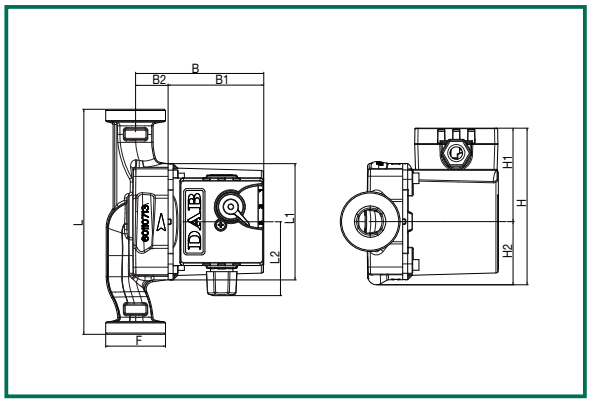

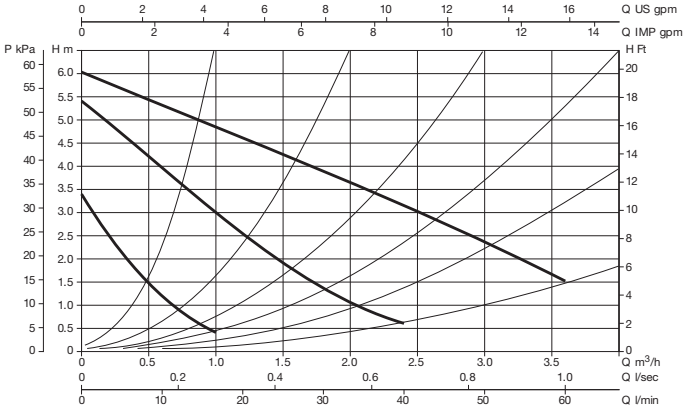

L	L1	L2	B	B1	B2	H	H1	H2	F	PACK DIMENSIONS L	PACK DIMENSIONS B	PACK DIMENSIONS H	VOLUME m³	WEIGHT kg
180	93	59	102,5	76,5	26	125,5	75	50,5	48	130	190	150	0,0037	2,6

MODEL	POWER SUPPLY 50 Hz	CENTRE-DISTANCE mm	UNIONS ON REQUEST	ELECTRICAL DATA SPEED	rpm	P1 MAX W	In A	CAPACITOR µF	CAPACITOR Vc	MINIMUM SUCTION PRESSURE
VA 65/180X	1x230 V ~	180	1¼"F	3 2 1	2310 1532 880	78 59 37	0,34 0,26 0,17	2	450	t° +90°C m.c.a. 2,5

DAB PUMPS reserves the right to make modifications without notice.

The performance curves are based on kinematic viscosity values = 1 mm²/s and density equivalent to 1000 kg/m³. Tolerance of curves to ISO 9906.

CIRCULATORS FOR HEATING AND AIR CONDITIONING SYSTEMS

Liquid temperature range: from -10°C to +110°C
Maximum working pressure: 10 bar (1000 kPa)

VB 65/120

SINGLE WITH OVAL FLANGES

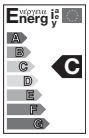

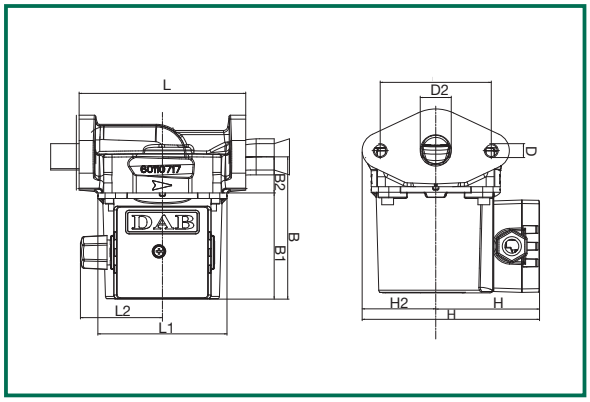

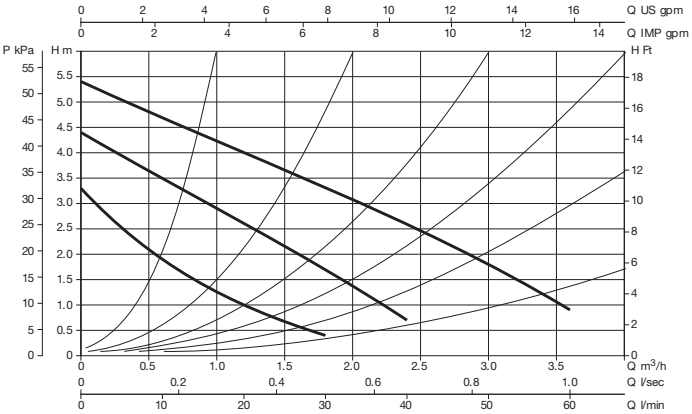

L	L1	L2	B	B1	B2	D2	D1	I	H	H1	H2	PACK DIMENSIONS L	B	H	VOLUME m³	WEIGHT Kg
120	98	60	104	78	26	26	M10	80	124	75	49	135	135	150	0,0027	2,7

MODEL	POWER SUPPLY 50 Hz	CENTRE-DISTANCE mm	UNIONS ON REQUEST		ELECTRICAL DATA						MINIMUM SUCTION PRESSURE
			STANDARDIZED	SPECIAL	SPEED	rpm	P1 MAX W	In A	CAPACITOR µF	Vc	
VB 65/120	1x230 V ~	120	DN 25	DN 20 DN 32	3 2 1	2310 1532 880	78 59 37	0,34 0,26 0,17	2	450	t° +90°C m.c.a. 2,5

VD 65/220.32

TWIN FLANGED

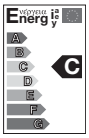

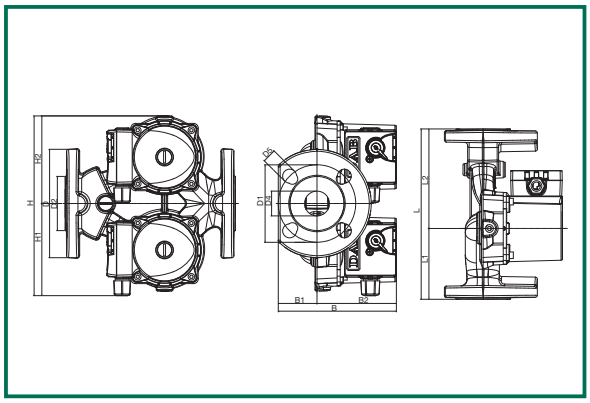

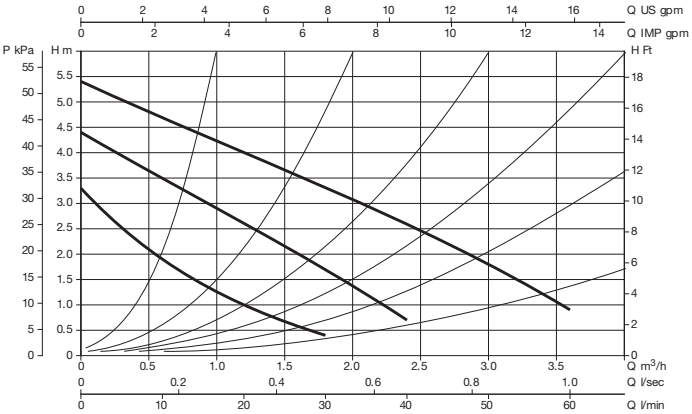

L	L1	L2	B	B1	B2	D	D1 PN6	D1 PN10	D2	D4	D5 PN6	D5 PN10	H	H1	H2	PACK DIMENSIONS B	L	H	VOLUME m³	WEIGHT Kg
220	91,5	128,5	150	50	100	140	90	100	70	31	14	18	230	115	115	160	253	238	0,0096	8,2

MODEL	POWER SUPPLY 50 Hz	CENTRE-DISTANCE mm	UNIONS ON REQUEST	ELECTRICAL DATA*						MINIMUM SUCTION PRESSURE
				SPEED	rpm	P1 MAX W	In A	CAPACITOR µF	Vc	
VD 65/220.32	1x230 V ~	220	DN 32 / PN 6 / PN 10	3 2 1	2310 1532 880	78 59 37	0,34 0,26 0,17	2	450	t° +90°C m.c.a. 2,5

*Electrical and hydraulic data refer to operation of just one motor.